MC 800

SAFETY AND CONTROL COMMAND SYSTEM FOR COMPLEX MACHINES

MC 800

SAFETY AT A HIGH LEVEL

The MC800 outreach and load limiter was built for an industry in which safety and reliability are essential. Our systems are installed on equipment such as fire trucks and have met the very demanding European safety standards as well as major manufacturers' requirements.

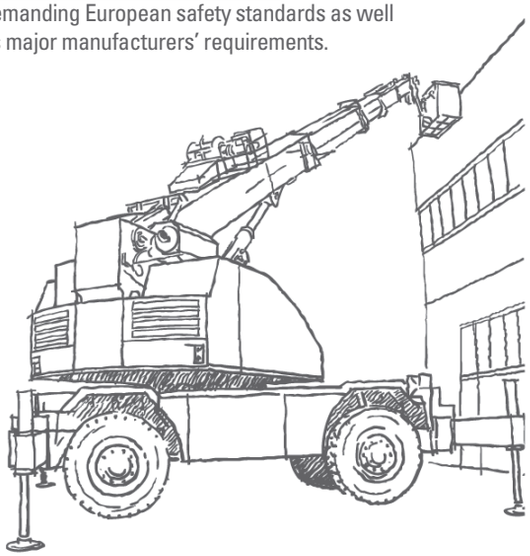

SAFETY AND CONTROL COMMAND SYSTEM

- Full management and control
- Full redundancy of sensors and processing
- Modular and adaptable system
- Remote maintenance
- Video input and color screen
- Cage or chassis leveling
- Winch or wheels position regulation
- Coordinate boom control
- Electonic valve control
- Automatic speed reduction based on engine status
- Automatic speed reduction when approaching limits

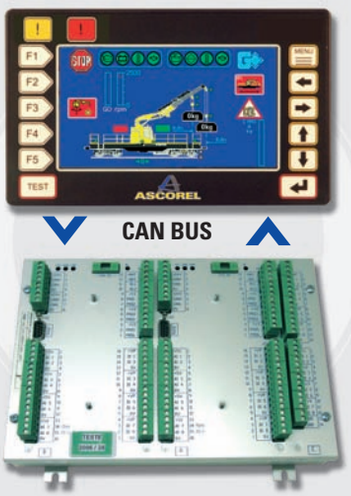

P: +33 (0)4 74. 57. 62. 63 F: +33 (0)4 74. 57. 62. 62 www.ascorel.com

MAIN FUNCTIONALITIES
MC 800

The MC800 can be installed on a wide range of machines. That's because we use the latest technology combined with a wide range of sensors and actuators which allows for infinite operation possibilities. We provide comprehensive vehicle-specific development partnerships for the optimum integration of electronics, sensors and customer-specific solutions.

APPLICATIONS
MC 800

- Fire Trucks
- Aerial Platforms (truck-mounted, crawler-mounted)
- Cranes (tower, telescopic, lattice boom)
- Other complex machines

TECHNICAL SPECIFICATIONS
MC 800

POWER REQUIREMENTS
Supply voltage: 9-36 Volts DC

ENVIRONMENTAL
Operating tempature: -4°F to 158°F (-20°C to 70°C)
Protection: IP65 (Dust and Water resistant)
Vibration and shock resistant

ASCOREL
Z.I. de Montplaisir
Rue du Champ de courses, BP 5
38780 PONT EVEQUE
FRANCE

© Ascorel-USA (07.FEB.FrenchMC800Bro.PRJ1.V1.1)